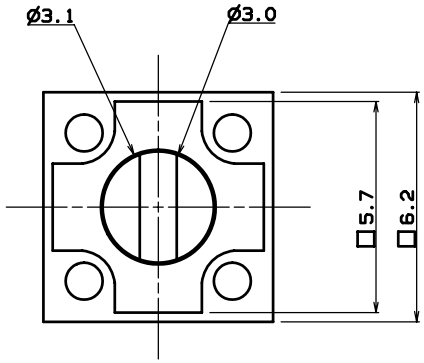

CIRCUIT DIAGRAM

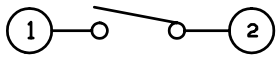

NOTE

1. OPERATING FORCE : 60 ±20gf
2. TRAVEL : 0.5mm Max
3. CONTACT RESISTANCE : 100mmΩ MAX
4. RATING : DC 30V 50mA

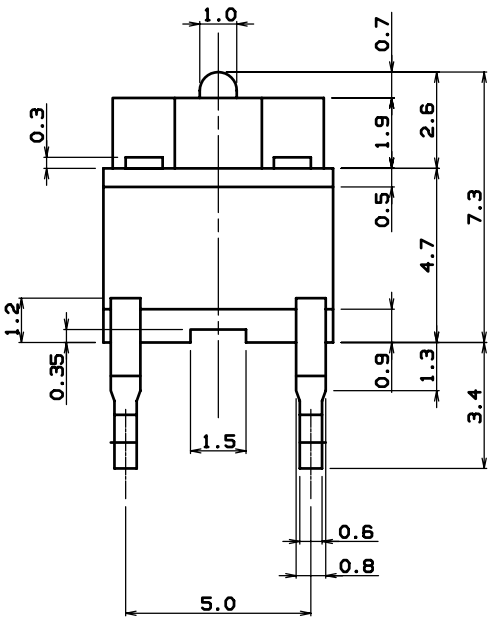

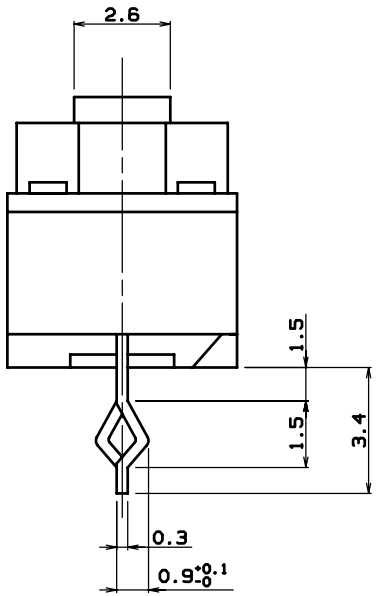

P.C.B LAND DIMENSION

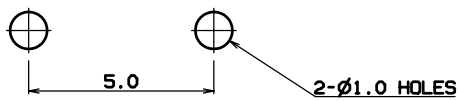

No.	PART NAME	Q'TY	MATERIAL	SIZE	TREAT.	REMARKS

5				3RD ANGLE PROJECTION	UNIT m/m	SCALE 1	MODEL MT 1175
4							
3				APPROVED	CHECKED	DESIGNED	DWG.NAME ASS'Y DIAGRAM
2							
1							DWG.NO.
NO.	DATE	NOTE	SIGN	. .	. .	. .	